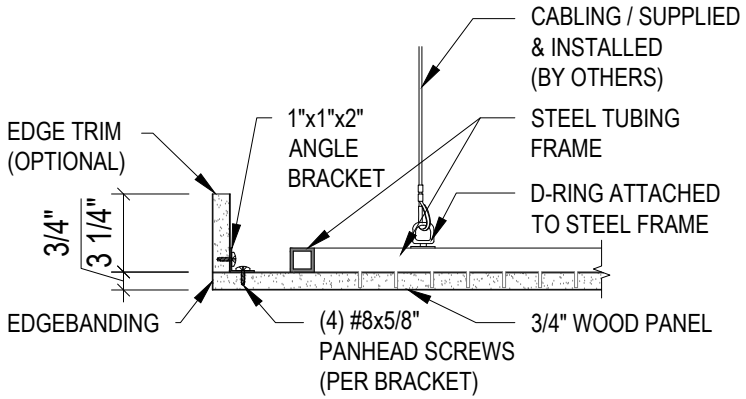


acoustigreen
123 Columbia Court North Chaska, MN 55318 (888) 258 4637

COPYRIGHT ACOUSTIGREEN © 2015

DRAWING NAME:
FLAT REFLECTOR DETAIL

DRAFTED BY: BCO LAST REVISED: 2/16/2016 SCALE: ----

DO NOT SCALE DRAWING. FIGURED DIMENSIONS ARE TO BE FOLLOWED. READ THIS DRAWING IN CONNECTION WITH GENERAL ARCHITECTURAL PLANS, STRUCTURAL PLANS, AND OTHER RELATED DRAWINGS. THESE DRAWINGS REPRESENT ACOUSTIGREEN'S UNDERSTANDING AND INTERPRETATION OF THE ARCHITECTURAL DRAWINGS AND HOW ACOUSTIGREEN PRODUCTS RELATE TO THE PROJECT.